Invisible
Furniture Connector

STRONG CONNECTIONS
BEAUTIFUL FURNITURE



POWERED BY STARCO HARDWARE

DURABLE BUILD

INVISIBLE DESIGN

EASY INSTALLATION

WIDE APPLICATION

+965 9793 9110
Call Center

Shuwaikh Industrial 2
Street 17, Building 53, Block 1

Al Rai
Street 24

Shuwaikh
Behind Al Bunouk Street

www.starco-hardware.com

Invisible Furniture Connector

وصلة أثاث مخفية





Features:

Easy Installation
The furniture connector is designed for quick and simple assembly, allowing you to set up your furniture without the need for special tools or skills.

سهولة التركيب: مصمم للتجميع السريع والسهل دون الحاجة إلى أدوات خاصة أو مهارات متخصصة

High-Quality Material
Made of high-quality materials, this connector ensures long-lasting strength and stability for your furniture.

خامات عالية الجودة: مصنوع من خامات عالية الجودة توفر قوة وثباتًا يدومان طويلًا للأثاث

Versatile Compatibility
Suitable for various types of board furniture, allowing different parts to be connected seamlessly.

توافق متعدد الاستخدامات: مناسب لمختلف أنواع أثاث الألواح لربط الأجزاء المختلفة بسهولة وانسيابية

Invisible Design
Its sleek and discreet design remains hidden once installed, maintaining the aesthetic appearance of your furniture.

تصميم مخفي: يظل مخفيًا بعد التركيب للحفاظ على المظهر الجمالي والأنيق للأثاث

Strong Load Capacity
Designed to withstand significant weight and provide reliable, stable support over time.

قدرة تحمل عالية: مصمم لتحمل الأوزان وتوفير دعم قوي وثابت للأثاث مع مرور الوقت

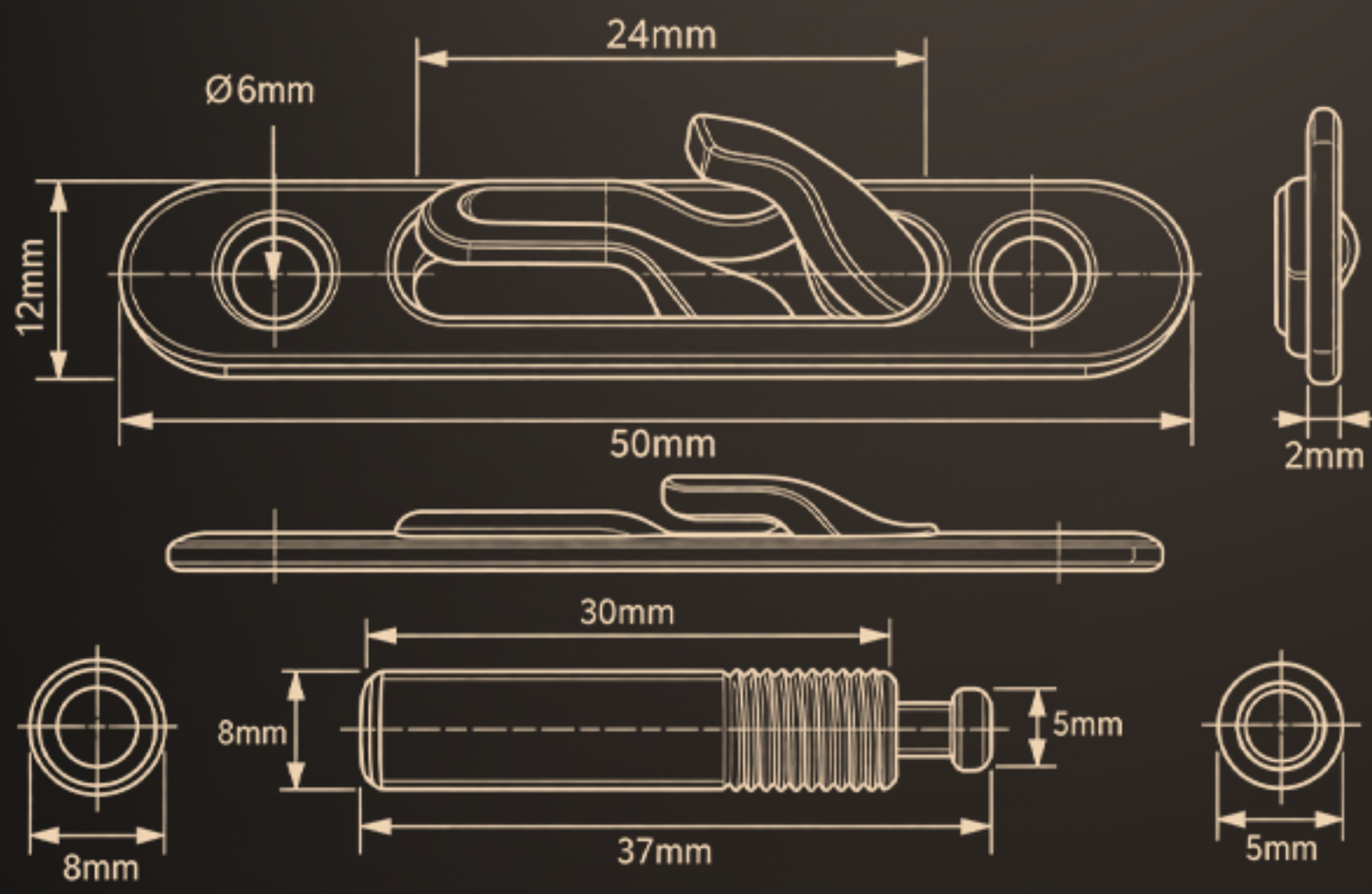

POWERED BY STARCO HARDWARE

+965 9793 9110
Call Center

Shuwaikh Industrial 2
Street 17, Building 53, Block 1

Al Rai
Street 24

Shuwaikh
Behind Al Bunouk Street

www.starco-hardware.com

Invisible Furniture Connector

وصلة أثاث مخفية

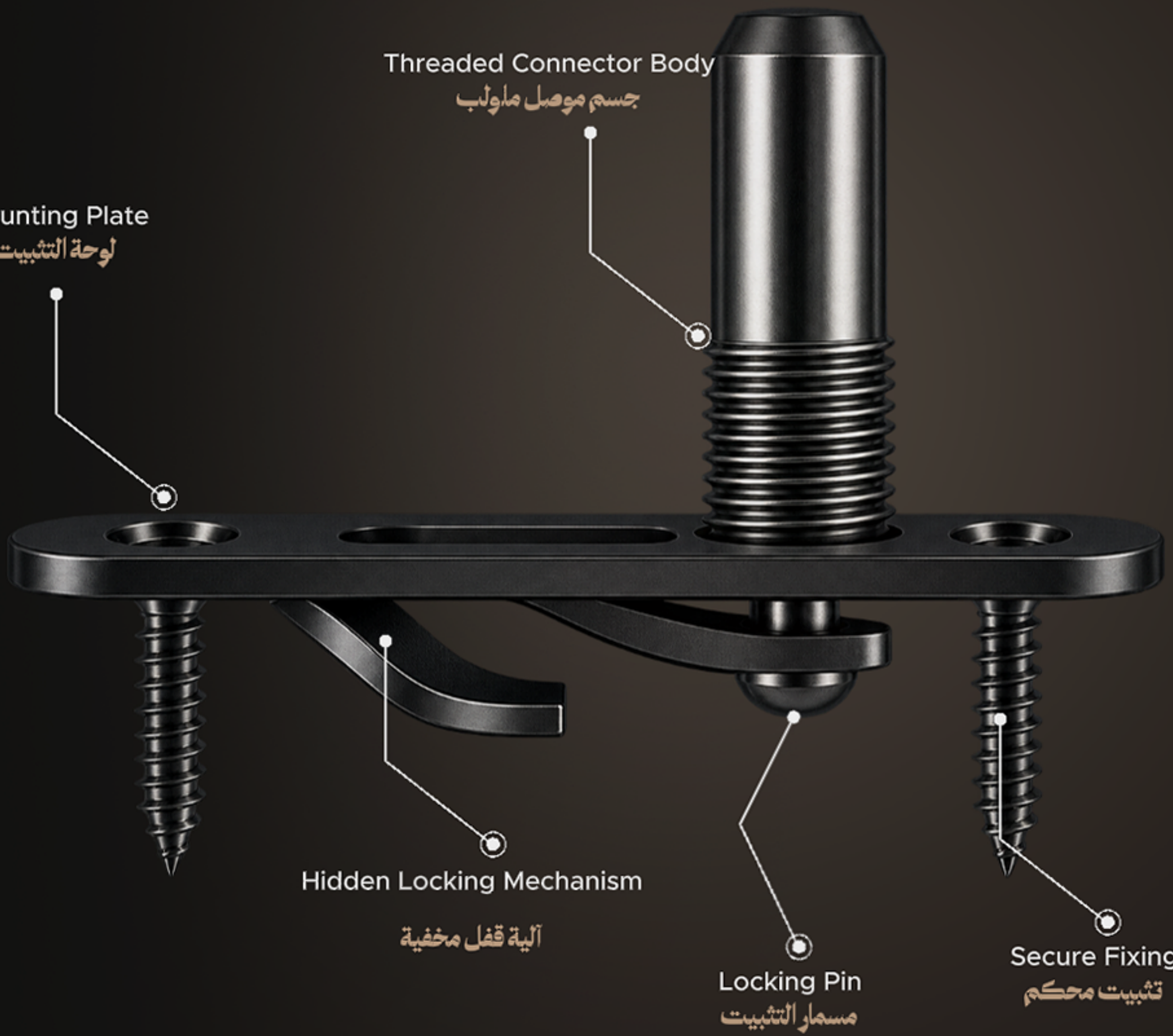

Engineered for a secure, hidden connection.
A compact furniture connector designed for quick installation,
strong fixing, and a clean finish with no visible hardware after assembly.

مصممة لربط قوي ومخفي.
وصلة أثاث مدمجة توفر تركيبًا سريعًا وتثبيتًا قويًا، مع الحفاظ على مظهر نظيف دون ظهور الوصلة بعد التجميع.

POWERED BY STARCO HARDWARE

+965 9793 9110
Call Center

Shuwaikh Industrial 2
Street 17, Building 53, Block 1

Al Rai
Street 24

Shuwaikh
Behind Al Bunouk Street

www.starco-hardware.com

Invisible Furniture Connector

وصلة أثاث مخفية

Easy Installation

سهولة التركيب

Quick and simple assembly

Invisible Design

تصميم مخفي

Stays hidden after installation



High-Quality Material

خامات عالية الجودة

Long-lasting strength and stability

Versatile Compatibility

توافق متعدد الاستخدامات

Suitable for various types of board furniture

Strong Load Capacity

قدرة تحمل قوية

Reliable support and stability

SMART CONNECTION. CLEAN RESULT.
Designed to provide a strong and reliable connection while remaining completely hidden after installation.

ربط ذكي. مظهر نظيف.

مصممة لتوفير ربط قوي وثابت مع بقاء الوصلة مخفية بالكامل بعد التركيب

POWERED BY STARCO HARDWARE

+965 9793 9110
Call Center

Shuwaikh Industrial 2
Street 17, Building 53, Block 1

Al Rai
Street 24

Shuwaikh
Behind Al Bunouk Street

www.starco-hardware.com

Invisible Furniture Connector

وصلة أثاث مخفية

HIDDEN INSTALLATION
Clean appearance with secure and reliable fixing.
Easy to assemble and disassemble.

تركيب مخفي
مظهر نظيف مع تثبيت قوي وموثوق.
سهولة في التركيب والفك.



POWERED BY STARCO HARDWARE

+965 9793 9110
Call Center

Shuwaikh Industrial 2
Street 17, Building 53, Block 1

Al Rai
Street 24

Shuwaikh
Behind Al Bunouk Street

www.starco-hardware.com

Invisible Furniture Connector

وصلة أثاث مخفية

FLUSH & HIDDEN INSTALLATION
.Embedded into the furniture surface for a clean, seamless finish
.Easy to install and disassemble

تركيب مدمج ومخفي
تُثبت داخل سطح الأثاث لتحافظ على مظهر نظيف وانسيابي.
سهلة التركيب والفك.



POWERED BY STARCO HARDWARE

+965 9793 9110
Call Center

Shuwaikh Industrial 2
Street 17, Building 53, Block 1

Al Rai
Street 24

Shuwaikh
Behind Al Bunouk Street

www.starco-hardware.com